PID Temperature Controller

PID500 / 110 / 330

OPERATING INSTRUCTIONS

Document name: Operating / 1008/ PID500/110/330 / Ver4, OP159-V04.

CONTENTS

Page no.

A) OVERVIEW.

1. Features..... 1
2. Ordering information..... 2

B) SPECIFICATIONS..... 3

C) INSTALLATION.

1. Safety Information..... 7
2. Terminal connections..... 9
3. Sensor input wiring..... 10
4. Control output wiring..... 10

D) PROGRAMMING.

1. Function menu..... 13
2. Keys' description..... 15
3. Level 0-Input parameters..... 16
4. Level 1-Output parameters..... 18
5. Level 2-Auxiliary output modes..... 21
6. Level 3-Alarm 2 module..... 24
7. Level 4-Special functions..... 25
8. Level 5-Communication parameters..... 28
9. Level 6-Lockout module..... 29

E) USER GUIDE..... 33

F) CONFIGURATION RECORD SHEET..... 38

G) CALIBRATION CERTIFICATE 42

Overview

SALIENT FEATURES

- **Universal Input**
  17 user selectable types including signal inputs.
- **Selectable lower display**
  User selectable lower display options enable quick setting of different parameters such as Set points, Alarms, PID values, Tuning etc.
- **Zone PID**
  4 programmable control zones.
- **Outputs**
  In signal output models output is selectable as control output or retransmission output.
- **Special Modes**
  User selectable special modes
  - Heat-Cool PID
  - Auto/Manual
  - Single point ramp/soak.
  - Soft start.

Others

- Dual 4 digit display
- Digital filtering
- Sensor break indication
- Sensor error compensation
- Programmable parameter lockouts
- 85 to 270 VAC/DC supply
- Compliance-CE UL
- IP66 front panel protection

Optional Features

- Extra Alarm output
- Heater current monitoring
- Linear DC outputs (Factory set) (0 to 10V, 0 to 5V, 0/4 to 20mA)
- Remote set-point input
- Motorised input
- RS-485 MODBUS communication
- 12 VDC output to drive SSR.
- 24 VAC/DC supply voltage models

2. ORDERING CODE -

PID 500 / PID 110 / PID 330 - A - B - XX

A : Output 1	
0	Relay
1	12VDC SSR drive
2	4 - 20mA (Current)
3	0 - 10V (Voltage)
4	0 - 5V (Voltage)
5	0 - 20mA (Current)

B : Output 2	
0	Relay
1	** 12VDC SSR drive

** For PID110/PID330
18V DC SSR drive

00	Only Output 1 & Output 2
01	Output 3 (Relay)
02	Output 3 (12 VDC SSR drive)
03	Communication RS485
04	Output 3 (Relay) + Communication RS485
05	Output 3 (12 VDC SSR drive) + Communication RS485
06	CT Input
07	Output 3 (Relay) + CT Input
08	Output 3 (12 VDC SSR drive) + CT Input
09	CT Input + Communication RS485
10	* Second Analog Input (valve positioner type)
11	* Second Analog Input (valve positioner type) + Communication Rs485
12	* Second Analog Input (Remote set point type)
13	* Second Analog Input (Remote set point type) + Communication RS485

* Second Analog input			
Valve positioner type		Remote Set point type	
-P	Potentiometric f/b input	-C	4-20mA input
-C	4-20mA f/b input	-V	0-10V input
-V	0-10V f/b input		

ORDERING EXAMPLE

Note: Input is user selectable.
Only Model name & output needs to be specified in the ordering code.

1. PID500 — 3 — 0 — 01

- 01 → Output 3 (Relay)
- 0 → Output 2 (Relay)
- 3 → Output 1 (Voltage)

Specifications

1. TECHNICAL SPECIFICATIONS

1. DISPLAY

Display	**PID500 - 48 X 48 -** Dual 4 digit 7- segment LED. Upper display : 10mm high Red (process value). Lower display : 7mm high Green (selectable). **PID110 - 48x96 -** Dual 4 digit 7- segment LED. Upper display : 10mm high Red (process value). Lower display : 7mm high Green (selectable). **PID330 - 96x96 -** Dual 4 digit 7- segment LED. Upper display : 14mm high Red (process value). Lower display : 10mm high Green (selectable).
Led Status Annunciators	Main output (1) Alarm output (2, 3) Manual output (M) Tune (T)

2. INPUT

Input	**Thermocouple:** J,K,T,R,S,C,E,B,N,L,U,W,Platinel II. **RTD:** PT100. **Signal inputs:** -5 to 56 mV, 0 to 10 VDC, 0 to 20 mA DC (Programmable scale type)
Sampling time	200 ms.
Resolution	1/0.1°for TC/RTD. 1/0.1/0.01/0.001 for Analog input. (Decimal point position)
Indication accuracy	±0.25% of span or 1°whichever is greater. (20min of warmup time). Cold junction calibration accuracy in TC mode ± 5°C.
Digital filtering	OFF, 1 to 99 sec.

3. OUTPUT

3.1. Control Output

Relay contact output	Rating: 5A @250 VAC or 30 VDC. Life expectancy: 100000 cycles at maximum load rating.
SSR drive voltage output (optional)	12 VDC.
Current output (Optional)	Range: 0 -20 mA DC, 4-20 mA DC (Factory set) Action: Control. Update rate: PID Update - Every Cycle time. Analog Output - 100 msec. Maximum output load resistance: 500E.
Voltage output (Optional)	Range: 0-5 VDC, 0-10 VDC.(Factory set) Action: Control. Update rate: PID Update - Every Cycle time. Analog Output - 100 ms. Minimum output load resistance: 10K.

Specifications

3.2. Alarm Output

Relay contact output (Relay 2, Relay 3 (optional)	Rating: 5A @250 VAC or 30 VDC. Life expectancy: 100000 cycles at maximum load rating.

3.3. Retransmission output (optional)

Current output	Range: 0 / 4-20mA. Action: Retransmission Update rate: 100 ms Maximum output load resistance: 500E
Voltage output	Range: 0-5 / 10V. Action: Retransmission Update rate: 100msec Minimum output load resistance: 10K

3. FUNCTION

Main control	Control: PID or ON/OFF. Output: Time proportioning or Linear DC. Proportional band: 0 to 400° Integral time: 0 to 3600 sec Derivative time: 0 to 200 sec Cycle time: 0.1 to 100.0sec. Auto tune. Programmable % output.
Zone PID	4 programmable control zones.
Heat-cool PID mode	Control: PID or ON/OFF Output: Time proportioning. Proportional gain: 0 to 400 Cycle time: 0.1 to 100.0sec. Heat/Cool dead band overlap: Programmable
Alarms	Modes: Deviation high, Deviation low, Band, Full scale high, Full scale low, Sensor break. Operation: Absolute or Deviation mode Hysteresis: Programmable Hold/Standby mode: Programmable Annunciator: Programmable Reset action: Programmable - Automatic or latched Probe break action: Upscale

4. OPTIONAL

4.1. Remote set point input

Input type	0...20mA / 0...10V.
Input Resistance	100 ohms.
Over range	-5% ... 105%.
Scale range	-1999...9999 with fixed 1°C for TC/RTD and as per resolution selected for Analog input.

Specifications

4.2. Heater current monitor input

Type	Single phase, full wave monitoring of load currents controlled by main output.
Input	100mA AC output from current transformer.
Display scale range	0....999.9A.
Input resistance	47 ohms.
Accuracy	±0.5% of full scale ± 1 digit.
Frequency	50...400Hz.
Alarm mode	LA / HA / BAND.
Over range	105% Capacity.
Over load	150mA (continuous).

4.3. Serial communication

Interface standard	RS 485.
Communication address	1 .... 99, maximum of 32 units per line.
Transmission mode	Half duplex.
Transmission protocol	MODBUS RTU.
Transmission distance	500 m maximum.
Transmission speed	9600, 4800, 2400, 1200, 600, 300 bits/sec.
Parity	None, Odd, Even, Mark, Space.
Stop bits	1 or 2.
Response time	100ms (max and independent of baud rate).

5. ENVIRONMENTAL CONDITIONS

Operating range	0 .... 50°C.
Storage range	-20 .... 75°C.
Storage humidity	85% max. RH (non condensing) from 0 to 50°C.

6. POWER SUPPLY

Power supply	85 .... 270 VAC/DC. (Optional 24 VAC/DC)
Frequency	50/60Hz.
Power consumption	5 VA max.

7. ISOLATION BREAKDOWN RATINGS.

AC line w.r.t. all inputs and outputs	2000 volts.
All other inputs and outputs w.r.t. Relay contacts	2000 VAC.

Specifications

8. SAFETY AND EMC STANDARDS.

Compliance	CE.
LVD	As per BS EN 61010.
EMC	As per BS EN 61326.
Panel sealing	IP66.

9. WEIGHT : PID500 : 195 gms ; PID110 : 250 gms ; PID330 : 295 gms

10. HOUSING : Flame retardant engineering plastic.

11. INPUT SENSOR RANGES (for 1°C resolution):

Sensor type	Range	Sensor type	Range
J	- 200 to 750°C	E	- 200 to 750°C
K	- 200 to 1350°C	B	+149 to 1820°C
T	- 200 to 400°C	N	- 200 to 1300°C
R	0 to 1750°C	L	- 200 to 600°C
S	0 to 1750°C	U	- 200 to 900°C
C	0 to 2300°C	W	0 to 2300°C
Platinel II	0 to 1390°C	PT100	- 100 to 850°C

Signal inputs:

Input type	Range
Linear mV	-5 to 56mV
Voltage	0 to 10 VDC
Current	0 to 20mA

12. INPUT SELECTION JUMPER ASSIGNMENTS:

Short respective pins of JP3 & JP4 as per the table given below for hardware selection of input sensor types:

Input type	JP3	JP4
TC / RTD / LIN (mV)	(XB)	(FE)
0 - 10V	(XB)	(EC)
4 - 20 mA	(BA)	(CD)

NOTE : Sensor selection to be done in Level 0 of programming also.

Installation

1. SAFETY INFORMATION

SAFETY SUMMARY

This manual is meant for the personnel involved in wiring, installation, operation, and routine maintenance of the equipment. All safety related codifications; symbols and instructions that appear in this operating manual or on the equipment must be strictly followed to ensure the safety of the operating personnel as well as the instrument.

If the equipment is not handled in a manner specified by the manufacturer it might impair the protection provided by the equipment.

⚠ **CAUTION:** Read complete instructions prior to installation and operation of the unit.

⚠ **CAUTION:** Risk of electric shock.

INSTALLATION INSTRUCTIONS

⚠ **CAUTION:**

1. This equipment, being built-in-type,normally becomes a part of the main control panel and in such case the terminals do not remain accessible to the end user after installation and internal wiring.
2. Conductors must not come in contact with the internal circuitry of the equipment or else it may lead to a safety hazard that may in turn endanger life or cause electrical shock to the operator.
3. Circuit breaker or mains switch must be installed between power source and supply terminals to facilitate power 'ON' or 'OFF' function. However this switch or breaker must be installed in a convenient position normally accessible to an operator.

⚠ **CAUTION:**

1. The equipment shall not be installed in environmental conditions other than those specified in this manual.
2. Fuse Protection - The equipment does not contain built-in fuse. Installation of external fuse for electrical circuitry is highly recommended. Recommended rating of such fuse shall be 275VAC/1Amp.
3. Since this is a built-in type equipment (finds place in main control panel), its output terminals get connected to host equipment. Such equipment shall also comply with basic EMI/EMC and safety requirements like BS EN 61326-1 and BS EN 61010 respectively.
4. Thermal dissipation of equipment is met through ventilation holes provided on chassis of equipment. Such ventilation holes shall not be obstructed else it can lead to a safety hazard.
5. The output terminals shall be strictly loaded to the manufacturer specified values/range.

MAINTENANCE

1. The equipment should be cleaned regularly to avoid blockage of ventilating parts.
2. Use soft cloth for cleaning. Do not use isopropyl alcohol or any other organic cleaning agent.

Installation

WIRING INSTRUCTIONS

⚠ CAUTION:

1. To prevent the risk of electric shock power supply to the equipment must be kept OFF while doing the wiring arrangement.
2. Terminals and electrically charged parts must not be touched when the power is ON.
3. Wiring shall be done strictly according to the terminal layout with shortest connections. Confirm that all connections are correct.
4. Use lugged terminals to meet M3.5 screws.
5. To eliminate electromagnetic interference use of short wire with adequate ratings and twists of the same in equal size shall be made.
6. Cable used for connection to power source, must have a cross section of 1 or greater. These wires shall have insulation capacity made of at least 1.5KV.

ELECTRICAL PRECAUTIONS DURING USE

Electrical noise generated by switching of inductive loads can create momentary disruption, erratic display, latch up, data loss or permanent damage to the instrument.
To reduce noise:
A) Use of MOV across supply of temperature controller & snubber circuits across loads are recommended. Part numbers are as follows:
1. Snubber: APRC-01.
B) Use separate shielded wires for inputs.
C) The unit should preferably be shielded from the contactor.

INSTALLATION GUIDELINES

Mechanical Installation:

For installing the controller

1. Prepare the panel cutout with proper dimensions as shown.

OVERALL DIMENSIONS (All dimensions in mm)

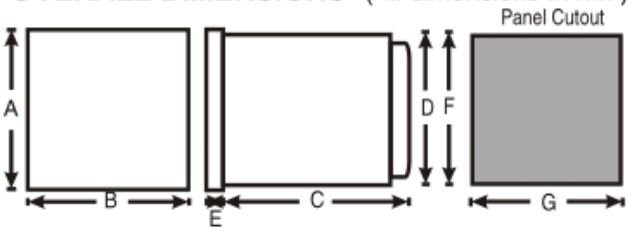

MODELS \ DIM	A	B	C	D	E	F	G
PID500	48	48	100	45	7	45	45
PID110	96	48	74.5	90	10	92	45
PID330	96	96	74.5	90	10	92	92

2. Remove the clamp from the controller.
3. Push the controller into the panel cutout. Secure the controller in its place by pushing the clamp from the rear side.

⚠ CAUTION:

The equipment in its installed state must not come in close proximity to any heating sources, caustic vapors, oils, steam, or other unwanted process by-products.

EMC Guidelines:

1. Use proper input power cables with shortest connections and twisted type.
2. Layout of connecting cables shall be away from any internal EMI source.

2. TERMINAL CONNECTIONS

PID500

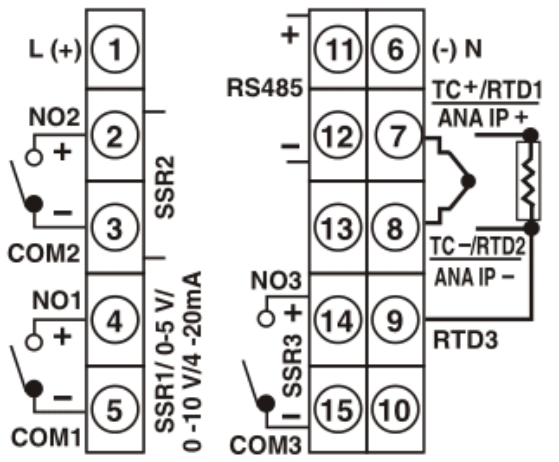

NOTE: Terminals 11 to 15 are optional

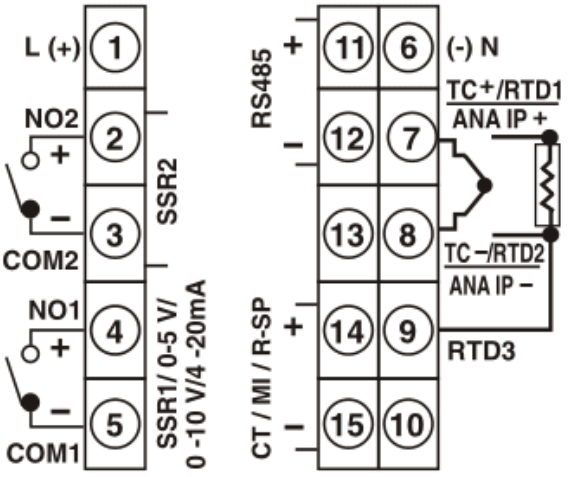

NOTE: Valid for optional configuration.

PID110

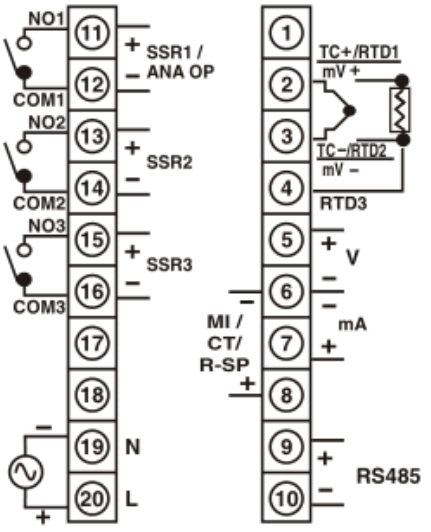

PID330

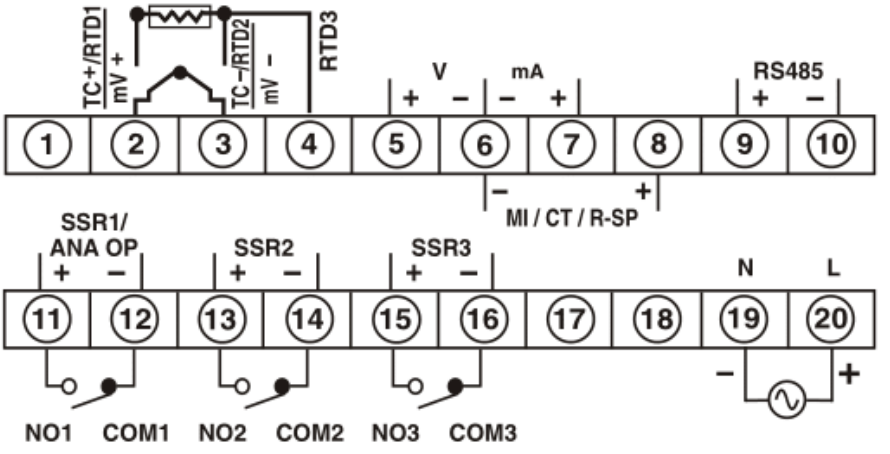

3. SENSOR INPUT WIRING

PID500	PID110 & 330
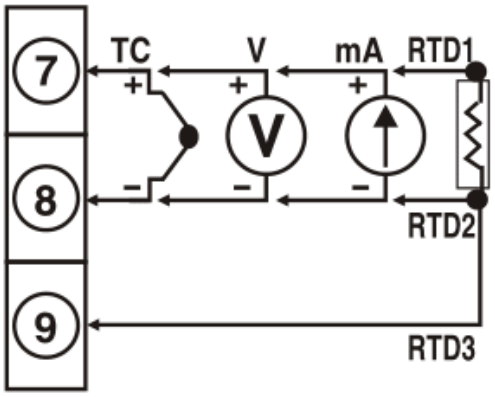	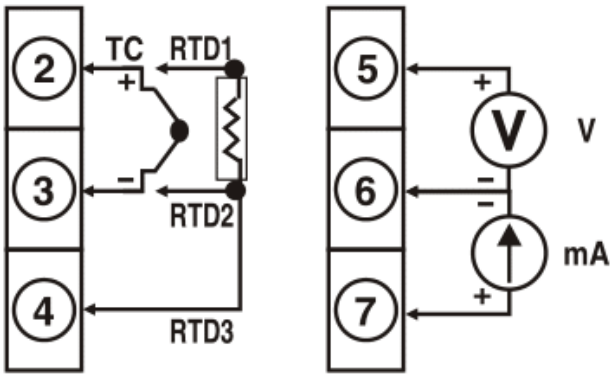

TC - Thermocouple (J, K, T, R, S, C, E, B, N, L, U, W, Platinel II).
V - Voltage Input (0 to 10 V DC).
mA - Current Input (0 to 20mA DC)
RTD - PT100.

NOTE : **1) Refer input type selection in level 0 of programming menu.**
2) For PID500 refer input jumper selection as in point no. 12 on page 6.
3) For 2 wire RTD short terminals 8 & 9 (for PID500) and terminals 3 & 4 (for PID110 & PID330) .

4. CONTROL OUTPUT WIRING

Fig1. Output 1 - Relay to drive load (resistive load less than 1A).

PID500	PID110 & 330
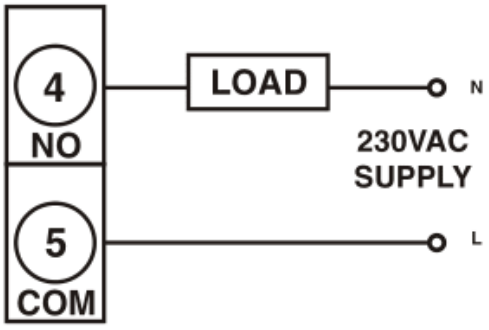	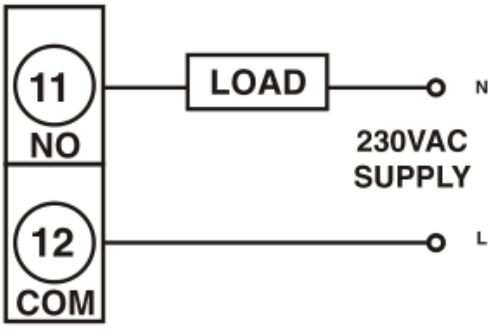

Installation

Fig2. Output 1 - Relay / SSR to drive contactor(For single phase).

PID500	PID110 & 330
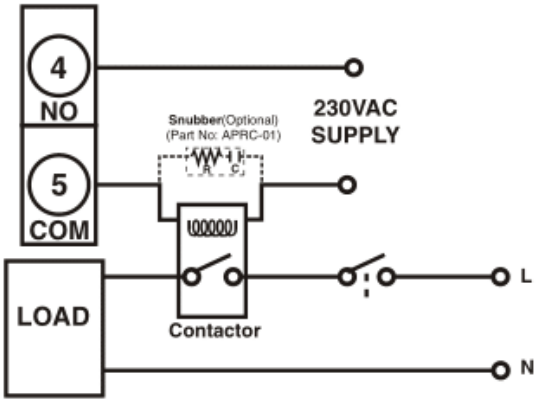	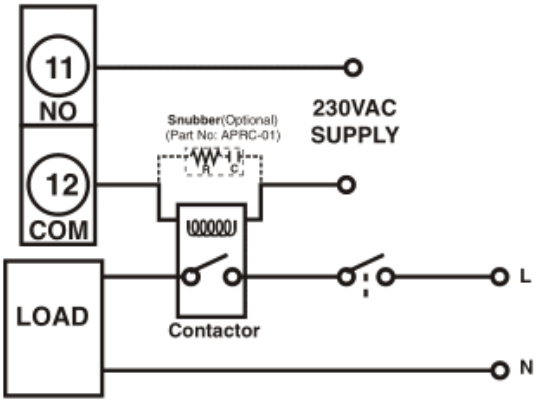

NOTE: Use snubber as shown above to increase life of internal relay of temperature controller.

Fig3. Output 1 - Pulsed voltage to drive SSR.

PID500	PID110 & 330
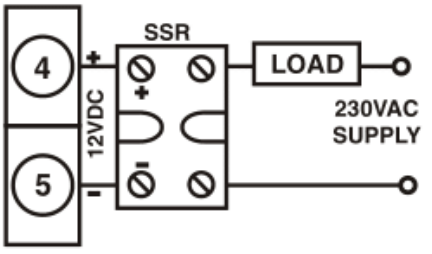	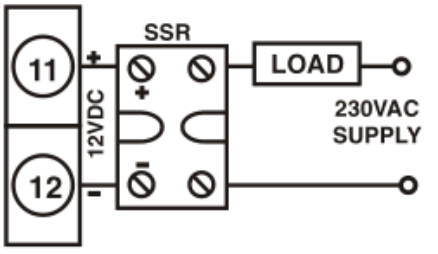

Installation

Fig4. Output 1 - Linear current.

PID500	PID110 & 330
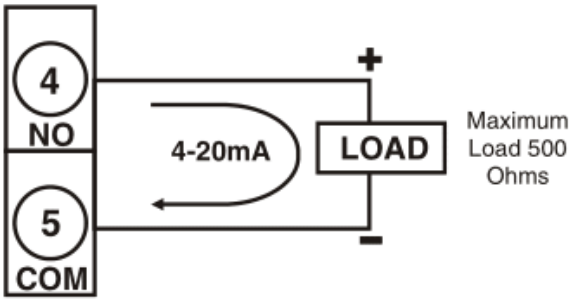	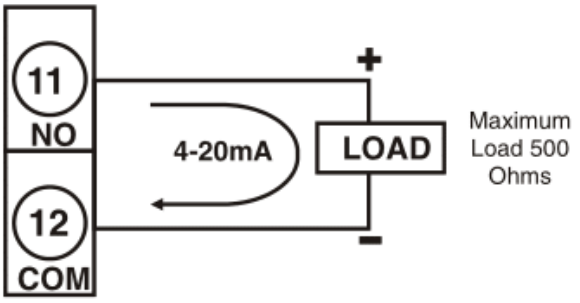

Fig5. Output 1 - Linear voltage.

PID500	PID110 & 330
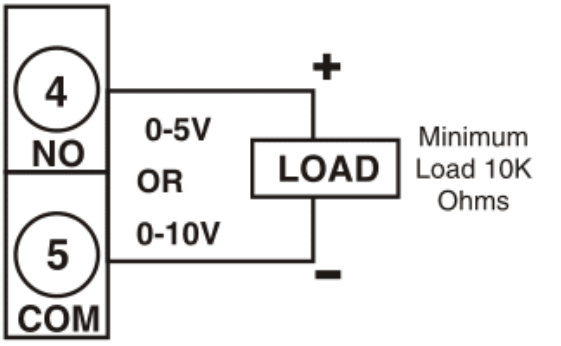	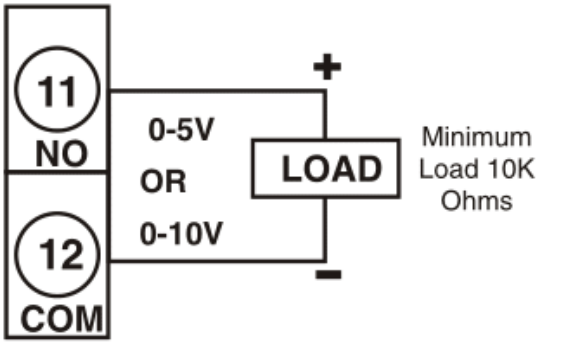

NOTE:

For output 2 and output 3:

1) Configuration is same.

2) Terminal nos -

Output 2 : **PID500 -** 2 - 3. **; PID110 & 330 -** 13 - 14

Output 3 : **PID500 -** 14 - 15. **; PID110 & 330 -** 15 - 16

Programming

1. FUNCTIONS MENU

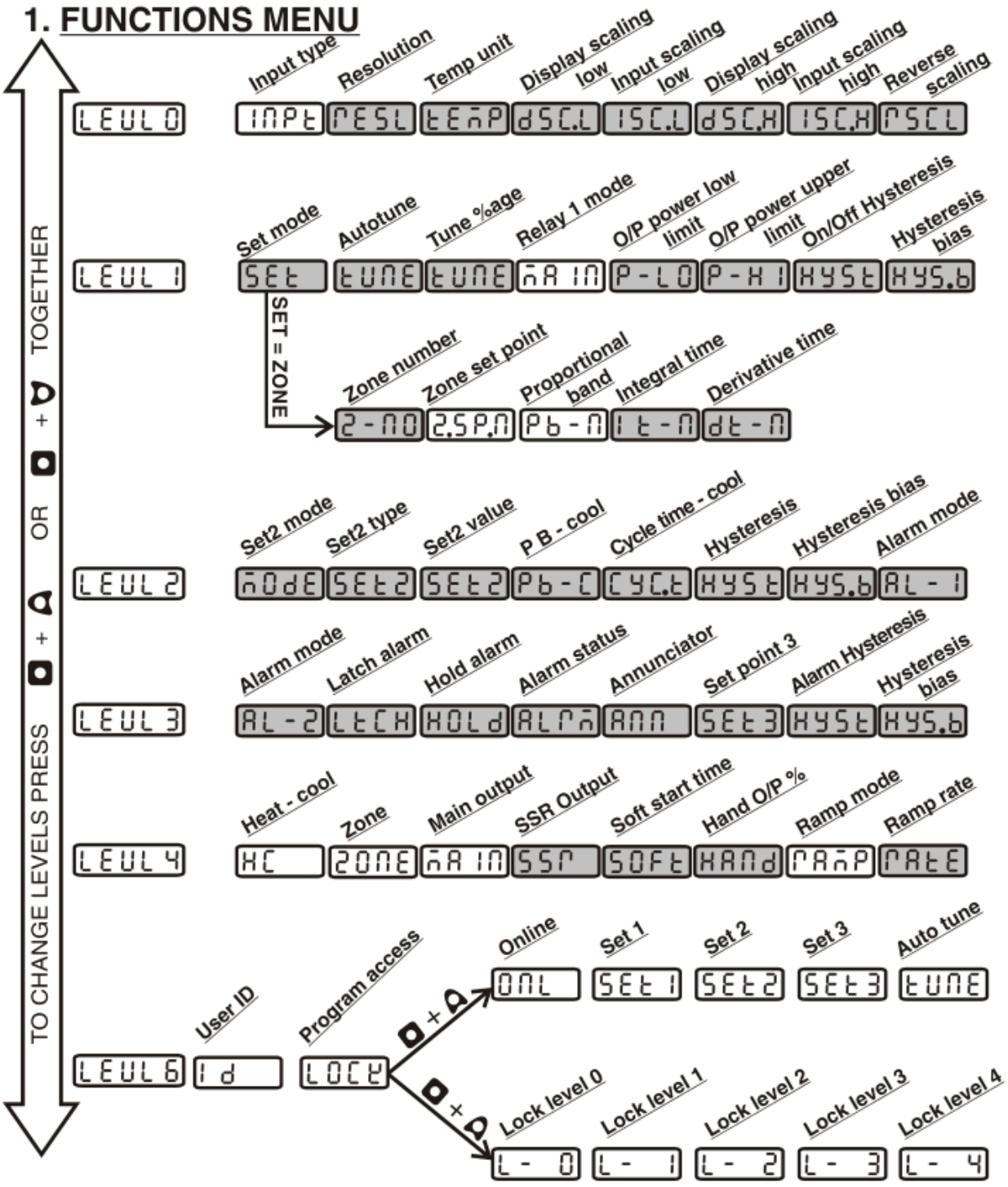

Appearance of all shaded menus dependent on selection of other parameters. Refer programming for further details

* Applicable only if Alarm2 is available.

Programming

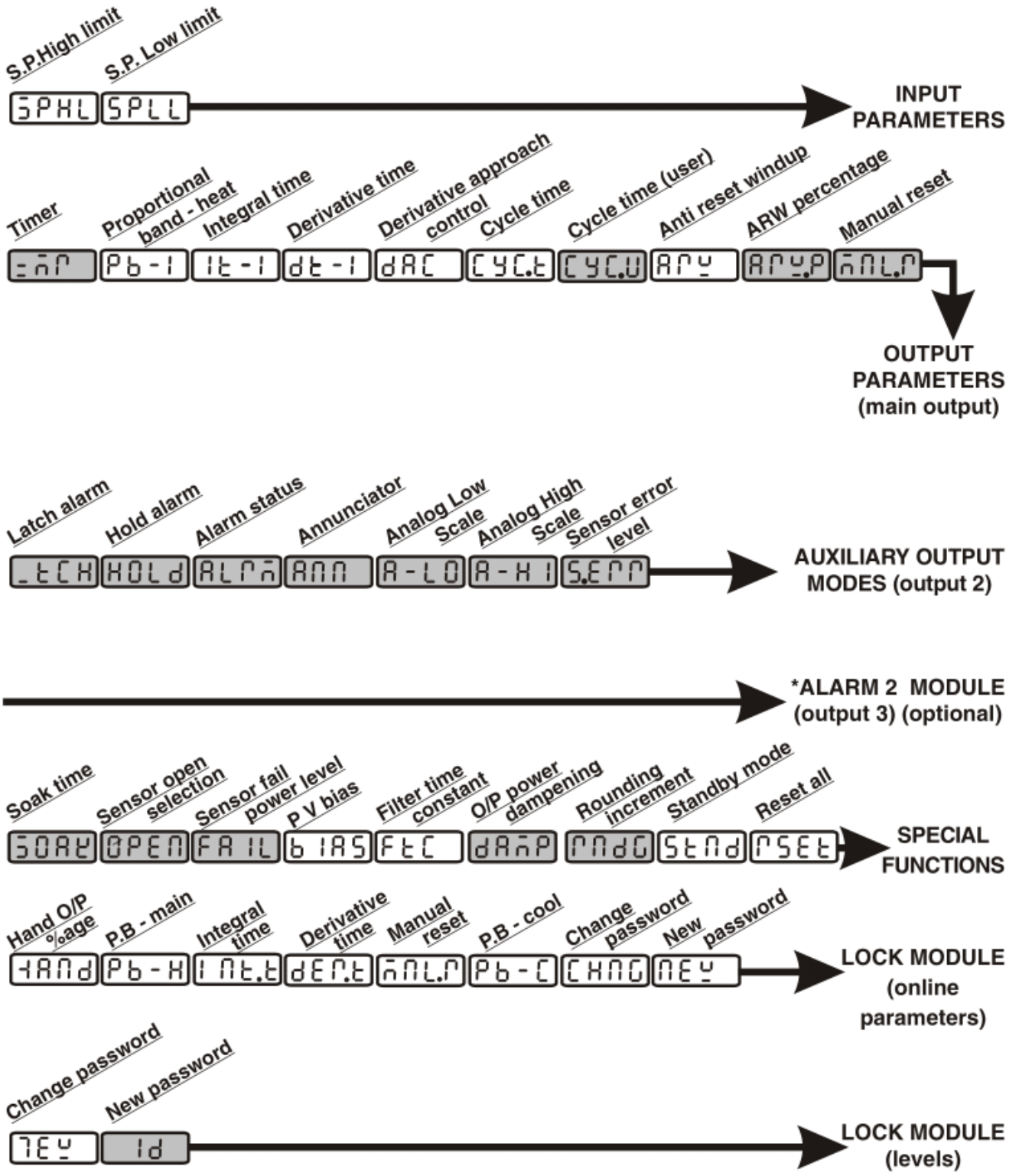

NOTE:- **LEVEL 5**- Communications Module.
LEVEL 9 - Heater current monitor input.
LEVEL 10 - Motorised input / Remote set point input.

Detailed description of the above levels will be provided as an addendum with the respective models.

Programming

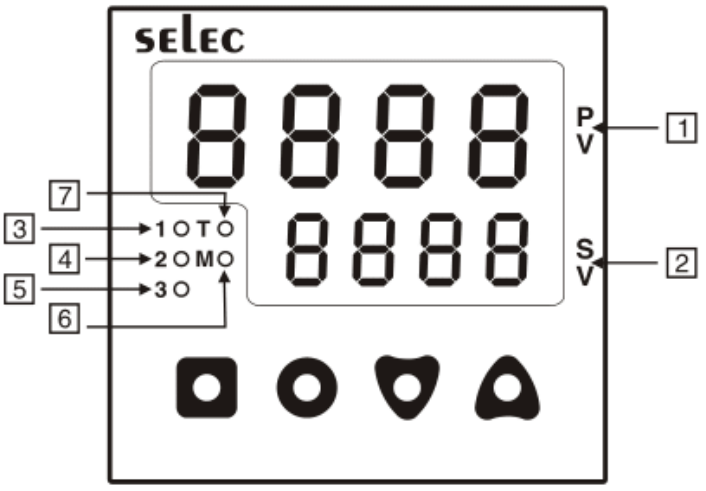

2. KEYS DESCRIPTION

Functions	Key press
To enter or exit program mode	▲ + ▼ together for 3 seconds
To change levels	▲ or ▼ till Level is displayed. ■ + ▲ / ▼ to increase or decrease the level number.
To view function on the same level and to display the current option.	▲ or ▼ key once to view the next / previous function.
To increase or decrease the value of a particular function.	■ + ▲ to increase and ■ + ▼ to decrease the function value.
To view and change parameters online	O key to view the parameter and O + ▲ / ▼ to scroll through the parameters. Press ■ + ▲ / ▼ to change parameter value.

NOTE: The unit will autoexit program mode after 60 seconds of inactivity.

INDICATIONS AND DISPLAY

1 Process-value (PV)	Display the process temperature value.
2 Set-value (SV)	Displays the value of the lower display option selected. By default display is set1 value.
3 Relay 1 (1)	Indicates the status of Main output (relay 1).
4 Relay 2 (2)	Indicates the status of Alarm output (relay 2).
5 Relay 3 (3)	Indicates the status of Alarm output (relay 3).
6 M	Indication for Fixed Manual output.
7 T	Indication for Tuning in progress.

PROGRAMMING OF LEVELS

3. LEVEL 0 - INPUT PARAMETERS

Display	Name & Description	Range	Display condition	Default value
INPt	Input type Select input type as Thermocouples: J,K,T,R,S,C,E, B,N,L,U,W. Platinel II. RTD: PT100 Signal Inputs: Linear mV (-5 to 56mV), Voltage (0 to 10V), Current (4 to 20mA). Refer table on page 6 for input ranges.	J/K/t/ r/S/C/E/ b/n/L/ U/W/PtnL Pt00/8888 10U /20mA	___	J
rESL	Resolution	TC * / RTD: 1/0.1 Analog input: 1/0.1/ 0.01/0.001	Not prompted for R, S, and B type thermocouple .	1
tEmP	Temperature unit	°C/°F	TC/RTD inputs.	°C
dSC.L	Display value scaling point1 #1 Feed the value of the display required at the lower value of analog input	-1999 to Display value scaling point2	Analog input.	0
ISC.L	Input value scaling point1 Feed the lower value of the analog input signal.	0.0 mA / -5.0mV / 0.0 V to Input value scaling point 2	Analog input.	As per input type selected.
dSC.H	Display value scaling point2 #1 Feed the value of display required at the higher value of analog input	Display value scaling point 1 to 9999	Analog input.	9999

* Fixed 1°C resolution for R, S, B type thermocouple.

Programming

Display	Name & Description	Range	Display condition	Default value
ISC.H	Input value scaling point2 Feed the higher value of the analog input signal.	Input value scaling point1 to 20.00mA /56mV /10.00V	Analog input.	As per input type selected.
RSCL	Reverse scaling Display scaling points can be reversed.	NO/YES	Analog input.	NO
SPHL	Set point high limit #1	Set point low limit to max. sensor range value. Set point low limit to 9999 for analog input.	——	750
SPLL	Set point low limit #1	Min. range of sensor to Set point high limit. -1999 to Set point high limit for analog input.	——	-200

Note: 1. Whenever resolution is changed from 1 to 0.1 SPLL and SPHL is limited to -199 and 999 respectively.
2. #1 - Display is with fixed 1° resolution for TC/RTD and as per decimal point selected for analog input.

PARAMETER EXPLANATIONS :

- **TEMPERATURE UNIT:**

The temperature unit is selectable between °C and °F. When temperature unit is changed, the temperature ranges will also be changed according to the present selection of unit. If changed, be sure to check all parameters.

- **RESOLUTION:**

The resolution is selectable between 1 and 0.1 for TC and RTD inputs whereas it is selectable between 1, 0.1, 0.01,0.001 for analog inputs. If changed, be sure to check all parameters.

PARAMETER EXPLANATIONS : (contd...)

• **SCALING FOR ANALOG INPUT:**

To scale the controller, two scaling points are necessary. Each scaling point has a coordinate pair of Display Values and Input Values. It is recommended that the two scaling points be at the low and high ends of the input signal being measured. Process value scaling will be linear between and continue past the entered points to the limits of the input range. (Factory settings example will display 0.0 at 0 mA input and display 9999 at 20.00 mA input.)

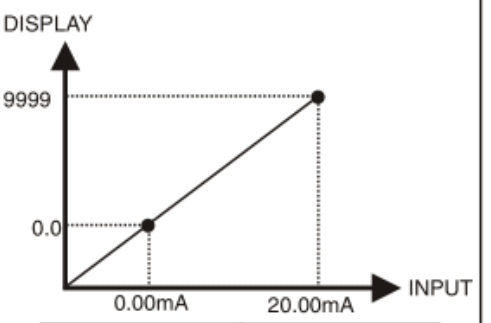

ISC.L = 0.00 DSC.L = 0.0 RSCL = no	ISC.H = 20.00 DSC.H = 9999

Reverse acting indication can be accomplished by setting **reverse scaling** parameter as YES. In this case **referring the above eg.** for 0.00 mA input the display will show 9999 and 20.00 mA input the display will show 0.0
NOTE : This change will not be visible in the programming menu.

• **SET POINT LIMIT VALUES:**

The controller has programmable high and low set point limit values to restrict the setting range of the set point. Set the limit values so that the temperature set point value cannot be set outside the safe operating area of the process.

4. LEVEL 1 - OUTPUT PARAMETERS

Display	Name & Description	Range	Display condition	Default value
SEt	Set Mode	ALL/ZONE	Zone PID = YES in level 4.	ALL

Display	Name & Description	Range	Display condition	Default value
tUNE	Auto tune	OFF/ON	PID control	OFF
tUNE	Tune percentage	P.AU , 75 to 100	Tune = ON	P.AU
mAIN	Main Output Mode	PE/Fd	Heat-cool = NO.	PE

Programming

Display	Name & Description	Range	Display condition	Default value
P-LO	Output power lower limit	0 % to o/p power high limit; -100 % to o/p power upper limit (in heatcool mode)	PID control	0 (-100 for heat - cool mode)
P-HI	Output power upper limit	O/p power low limit to 100 %	PID control	100
HYSt	ON-OFF control hysteresis	0.1 to 99.9	ON-OFF control*	1.0
HYS.b	Hysteresis bias	TC/RTD: -9.9 to 9.9 ° Analog input: -9.9 to 99 as per decimal point selected.	ON-OFF control*	0.0
tmr	Timer	0.0 to 99.9 minutes	Main= Fd and control is ON-OFF.*	0.0
Pb-1	Proportional band- heat	0 to 400.0	——	10
It-1	Integral time	0 to 3600 sec.	PID control	120
dt-1	Derivative time	0 to 200 sec.	PID control	30
dAC	Derivative approach control	0.5 to 5.0 (x band)	PID control	1.0

*NOTE : For operating in ON-OFF mode make Proportional band = 0

Programming.

Display	Name & Description	Range	Display condition	Default value
CYC.t	Cycle time	USEr/ USP.F/A 15.0	PID control	USEr
CYC.U	Cycle time-user	0.1 to 100.0 sec	Cycle time = USEr	15.0
ARY	Anti-reset windup	AUtO/ mAnL	PID control	AUtO
ARYP	Anti-reset windup %	20.0 to 200.0%	ARW = MAnL	100.0
mNLr	Manual Reset	- 99.9 to 99.9 (for 0.1° resolution) 99 to 99°C (for 1°) - 999 to 999 (for analog input)	Proportional band > 0 and Integral time = 0.	0

If Set Mode = All and Zone PID = YES, The parameters except the shaded ones (i.e. Pb-1, It-1, dt-1) will be prompted.

If Set Mode = Zone and Zone PID = YES, the following parameters will be prompted.

Display	Name & Description	Range	Display condition	Default value
Z-nO	Zone number	1 to 4	Zone PID= YES(in level4)	1
Z.SP.n	Zone set point	SPLL to SPHL	——	0
Pb-n*	Proportional band	0 to 400.0°	——	10
It-n*	Integral time	0 to 3600 sec.	Pb - n > 0	120
dt-n*	Derivative time	0 to 200 sec.	Pb - n > 0	30

***NOTE:** For Proportional band, Integral time and Derivative time n = 1 to 4

Programming.

PARAMETER EXPLANATIONS :

- **AUTO TUNING:**

Auto tuning is a function whereby the controller learns the process characteristics by itself and automatically sets the required P,I and D values. The new P,I,D parameters will be stored in non-volatile memory automatically. TUNE ON is indicated by 'T' LED blinking. (For detailed explanations of PID parameters refer USER GUIDE).

- **OUTPUT POWER LIMITS:**

These parameters are used to limit the minimum and maximum controller output power. The output power lower limit will ensure that a minimum percentage of output (as per requirement) is available in case any process disturbances or setpoint changes occur. The output power high limit ensures that in case any process disturbance or set point changes occur, the maximum value of output is limited to a value as per requirement.

- **TIMER:**

TIMER is main output restart time. In this main output once turned OFF will turn ON only after set time even if the temperature has increased and is more than the set temperature. This is needed to prevent the compressor from restarting in a short time (less than the set time).

- **CYCLE TIME:**

There are 3 selectable modes for programming cycle time:
USEr: User can program the cycle time. The mode will be altered to AutO when put to autotune.
Usr.F: User can fix the cycle time. This has the highest priority.
AutO: This is recommended. The cycle time value is calculated automatically during autotune.

- **ANTIRESET WINDUP:**

The anti-reset windup (ARW) inhibits the integral action until the PV is within the proportional band thus reducing overshoot on start-up. If the selection is -
1. AutO: The value will be calculated automatically during autotune (Recommended).
2. ManL: The value can be fed manually by the user.

5. LEVEL 2 - AUXILIARY OUTPUT MODES

Display	Name & Description	Range	Display condition	Default value
nOdE	Set 2 Mode *	ALMn/nONE /Fd/rEU	Not for Heat-cool mode.	ALMn
SEt2	Set 2 Type	AbS / dEU	Set2 mode = Fd / rEV.	dEU
SEt2	Set 2 Value	SPLL to SPHL	Not prompted if Set2 mode = alarm & alarm mode = S. Brk.	0
Pb-C	Proportional band-Cool	0.0 to 400.0	Heat-cool mode	0.0
CYC.t	Cycle time-Cool	0.1 to 100.0 Sec.	Pb-C>0	15.0

NOTE: * - If set2 mode = none, no other parameters will be prompted.

Programming.

Display	Name & Description	Range	Display condition	Default value
HYSt	Hysteresis	0.1 to 99.9°C	1. Set2 mode=Fd/rEV/ALrM (not sensor break); 2. Heat cool mode (Pb-C=0)	1.0
HYS.b	Hysteresis bias	TC/RTD: - 9.9 to 9.9°C Analog input: - 9.9 to 99 as per decimal point selected.	1. Set2 mode=Fd/rEV /ALrM (not sensor break); 2. Heat-cool mode (Pb-C=0)	0.0
AL-1	Alarm1 mode	OFF/dUHI /dULO/bAnd /FSHI /FSLO /S.bPt	Set2 mode=ALrM	dUHI
LtCH	Alarm latch	OFF/On	These parameters are not prompted if Alarm1 mode is OFF.	OFF
HOLd	Hold Alarm	OFF/On		OFF
ALPn	Relay status for Alarm1	En/dEn		En
AnN	Alarm Annunciator	OFF/On		OFF
A-LO	Analog low scaling	-999 to 9999	For Analog retransmission if Main output = Relay2 in Level 4	0
A-HI	Analog high scaling	-999 to 9999	For Analog output if Main output = Relay2	1000

Programming.

Display	Name & Description	Range	Display condition	Default value
S.ERR	Sensor error level Incase of sensor failure the output can be set to high or low value of range.	HIGH/LOW	For Analog output if Main output = Relay2	HIGH

NOTE:
In **HC mode** only the following parameter will be prompted :-

1. Set 2 value - this parameter will be prompted as db (dead band)
2. Proportional band - cool (Pb-C)
3. Cycle time - cool (cyc.t)

In case of analog retransmission only the following parameters will be prompted:

1. A-LO : Analog low scaling.
2. A-HI : Analog high scaling.
3. S.ERR : Sensor error level.

Display is with fixed 1° resolution for TC/RTD and as per decimal point selected for analog input.

PARAMETER EXPLANATIONS :

- **SET 2 MODE:**

AlrM: Set2 can be programmed as alarm.
NonE: If set2 is not required it can be programmed as none.
Fd: Set2 programmed in cooling mode.(output ON when above the setpoint).
rE: Set2 programmed in heating mode.(output ON when below the setpoint)

- **SET 2 TYPE:**

AbS: Absolute alarm is a self-existent alarm independent of the main set point.
DEV: The alarm is activated at an error on the main set point.

- **ALARM MODES:**

(Refer **USER GUIDE** for detailed explanation).

- **ALARM LATCH:**

When Latch is ON, the alarm once activated remains activated even when the error is removed. To deactivate the alarm, it has to be acknowledged by selecting AL-NO from the front online options and pressing ◘+🔔

- **HOLD ALARM:**

When HOLD is ON, in any alarm mode, it prevents an alarm signal on power-up. The alarm is enabled only if the process temperature is within the alarm range.

- **ALARM ANNUNCIATOR:**

When alarm annunciator is ON, during alarm condition, visual annunciation is given by the upper display altering between AL-NO and process temperature where NO is the alarm number. The annunciator may be disabled by selecting function ANN as OFF.

- **SENSOR ERROR LEVEL :**

This parameter determines the analog retransmission output level in case of sensor failure. For eg : In case of 4-20mA retransmission output, if the sensor error level is set to High, 20mA will be available at the output at all times incase of input sensor failure.

6. LEVEL 3 - ALARM 2 MODULE (OPTIONAL)

Display	Name & Description	Range	Display condition	Default value
AL-2	Alarm2 mode	OFF/dUHI /dULO/bAnd /FSHI/FSLO /S.bnk.	Alarm 2 should be available.	dUHI
LtCH	Alarm latch	OFF/On	These parameters are not prompted if Alarm 2 mode is OFF.	OFF
HOLd	Hold Alarm	OFF/On		OFF
ALnn	Relay status for Alarm2	En/dEn		En
AnN	Alarm Annunciator	OFF/On		OFF
SEt3	Set 3 Value	SPLL to SPHL	These parameters are not prompted if Alarm 2 mode is OFF/brk.	0
HYSt	Alarm Hysteresis	0.1 to 99.9°C **for TC/RTD;1 to 99°C for analog input.**		1.0
HYS.b	Hysteresis bias	-9.9 to 9.9°C (for TC/ RTD); -99 to 99 for AIN models decimal point as per selected		0.0

PARAMETER EXPLANATIONS:
For parameter explanations refer Level 2.

7. LEVEL 4 - SPECIAL FUNCTIONS

Display	Name & Description	Range	Display condition	Default value
HC	Heat-cool mode The controller can be operated in heat-cool mode if this selection is YES.	NO/YES	—	NO
ZONE	Zone PID	NO/YES	—	NO
MAIN	Main Output	(PLY1 ROUT) PLY2	—	PLY1/ ROUT
SSP	SSR Output	NO/YES	SSR output model	NO
SOFT	Soft start time	OFF, 000 to 999 minutes.	PID control	OFF
HAND	Hand output percentage	OFF,O/P power low limit to O/P power high limit.	PID control	OFF
RAMP	Ramp mode	OFF/HOLD /ON	—	OFF
RATE	Ramp rate	0001 to 9999 degree/hour.	Ramp mode =ON/HOLD.	100
SOAK	Soak time	0 to1440 minutes	Ramp mode =ON/HOLD.	0
OPEN	Sensor open condition	AUTO/MANL	PID control	AUTO
FAIL	Sensor fail power level	0 to100%; -100 to100 % in case of heat-cool mode.	Sensor open condition = MANL.	0
BIAS	PV bias (Display Offset)	-999 to +999 for TC (RTD) & -999 to +99.9 for AIN models decimal point as per selected.	—	0.0

Programming

Display	Name & Description	Range	Display condition	Default value
FtC	Filter time constant	OFF, 1 to 99 seconds	——	1
dAmP	Output power dampening	OFF, 1 to 99 seconds	Analog output model.	1
mndC	Rounding increment	0.1 to 10.0 for TC/RTD Display as per decimal point selected for analog input.	TC / RTD with resolution = 1°C or Analog input.	1.0
StNd	Standby mode	NO / YES	——	NO
rSEt	Reset all	NO / YES	——	NO

PARAMETER EXPLANATIONS :

- **MAIN OUTPUT:**

The main control output is selectable between Relay1 / Analog output (available across terminals 4 and 5) and Relay2 (available across terminals 2 and 3). If main output is selected as Relay 2, all the control parameters will be applicable to the output connected to Relay 2 but the set point applicable will be Set 1 (main set point). For analog retransmission, the main output must be set to Relay 2 and the analog output (across 4 and 5) will be used for retransmission.

- **SOFT START TIME:**

Soft start time can be programmed in situations where full output is not required at power ON. The time duration for the output to rise from 0% to 100% is programmed as soft start time.

- **HAND OUTPUT PERCENTAGE:**

This parameter can be used when a fixed percentage of output is desired. For example: If 4-20mA analog output is being used and the desired output is 12mA, the hand percentage can be programmed as 50%. This will ensure that the analog output available is fixed 12 mA i.e. 50%. In case of relay output models, the relay ON time and OFF time will be according to the programmed Hand output percentage i.e. For 50% hand o/p percentage and cycle time 15sec, relay will be ON for 7.5sec and OFF for 7.5 sec.

- **RAMP - SOAK:**

The set point ramp feature can reduce thermal shock to the process, reduce temperature overshoot on start-up or set point changes, or ramp the process at a controlled rate. The soak feature can be used to hold the process at a preset temperature for a preset time.

Ramp modes:

Ramp OFF: Controller will be simple PID / ON-OFF controller with P, I, D settings / hysteresis setting by user or default.

Ramp HOLD: Suspends the ramp at the last value.

Ramp ON: Initiates the ramp. Ramp rate and soak time settings as programmed by the user or default.

- **SENSOR OPEN CONDITION:**

The sensor open condition is selectable between Auto and Manual. If the sensor open condition is set to Auto, then all the relays remain off at over range or TC reverse condition. If the selection is Manual then the **sensor fail power level** can be programmed as per requirement.

- **PV BIAS:** (DISPLAY OFFSET)

This function is used to adjust the PV value in cases where it is necessary for PV value to agree with another recorder or indicator, or when the sensor cannot be mounted in correct location.

- **FILTER TIME CONSTANT:**

The filter is an adaptive digital filter that discriminates between measurement noise and actual process changes. If the input signal is increasing too greatly due to measurement noise, increase the filter value. If accurate control is desired, increase the filter time constant whereas if the fastest controller response is required, decrease the filter time constant.

- **ROUNDING INCREMENT:**

This feature can be used to round off the display to a higher value than "1" in cases where the process input and in turn the display is fluctuating. Rounding selections other than 1 cause the process value to round to the nearest rounding increment selected. For example, a rounding increment value of 5 causes 122 to round to 120 and 123 to round to 125. This parameter is not applicable when the resolution is 0.1(for TC/RTD). Set point values, Set point limits, Alarm values, Input Scaling values, and Analog Scaling values are not affected by rounding. The rounding increment is for controller's display only and does not affect (improve or degrade) the control accuracy of the unit.

- **STANDBY MODE:**

This feature is useful during machine wiring. If standby mode is selected as YES, the following conditions exist:

a. All displays are OFF.
b. All outputs are OFF i.e. R1, R2, R3 LEDs are OFF.
c. M LED is ON.
d. Analog output is limited to the lower range.
e. All front keys are disabled.
f. Access to configuration enabled.

The STND status is preserved on Power OFF.

- **OUTPUT POWER DAMPENING:**

This parameter entered as a time constant in seconds, dampens (filters) the calculated output power. Increasing the value increases the dampening effect. Dampening times longer than, say, one-twentieth to one-fiftieth of the controller's integral time may cause controller instability. This parameter is valid only for analog output models.

8. LEVEL 5 - COMMUNICATION PARAMETERS (OPTIONAL)

Display	Name & Description	Range	Display condition	Default value
bAUd	Baud Rate	300/600/1200 2400/4800 9600	——	9600
AddR	Communication station No.	1 to 99	——	1
PAR1	Parity	NONE/EUEN Odd/ñARY SPCE	——	NONE
StOP	Stop bit	1/2	——	1

CONNECTION DIAGRAM

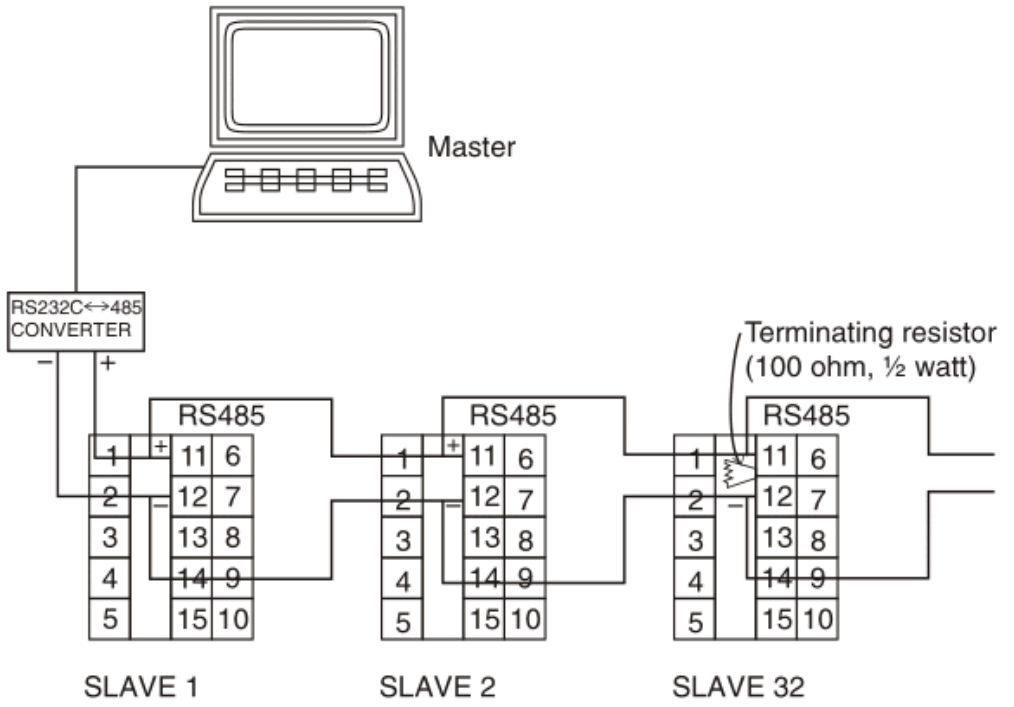

Note:
1. Maximum 32 slave controllers can be connected to the master.
2. The total cable length should not exceed 500 meters.
3. Use shielded twisted -pair cables for RS485 connections.
4. Use terminators having a resistance of 100ohm (½ watt).

RS485-RS232 Converter
Part no.- AC-RS485-RS232-01

8. LEVEL 6 - PROGRAMMABLE PARAMETER LOCKOUT MODULE

Display	Name & Description	Range	Display condition	Default value
Id	User ID	0000 to 9999	___	0000
LOCK	Program access settings #	ONL/LEVL	___	LEVL

 # If LOCK selection is ONL, the following parameters will be prompted.

Display	Name & Description	Range	Display condition	Default value
SEt 1	Lock Set 1	UNLY/READ /LOCK	___	UNLY
SEt2	Lock Set 2	UNLY/READ /LOCK	___	UNLY
SEt3	Lock Set 3	UNLY/READ /LOCK	___	UNLY
tUNE	Lock tune parameter	UNLY/READ /LOCK	___	UNLY
HAND	Lock Hand parameter	UNLY/READ /LOCK	___	UNLY
Pb-H	Lock proportional band	UNLY/READ /LOCK	___	UNLY
INtt	Lock integral time	UNLY/READ /LOCK	___	UNLY
dEN.t	Lock derivative time	UNLY/READ /LOCK	___	UNLY
ANL.N	Lock Manual reset parameter	UNLY/READ /LOCK	___	UNLY
Pb-C	Lock proportional band-cool	UNLY/READ /LOCK	___	UNLY

Programming

 # If LOCK selection is LEVL, the following parameters will be prompted.

Display	Name & Description	Range	Display condition	Default value
L- 0	Lock Level 0	UNLK/READ /LOCK	___	UNLK
L- 1	Lock Level 1	UNLK/READ /LOCK	___	UNLK
L- 2	Lock Level 2	UNLK/READ /LOCK	___	UNLK
L- 3	Lock Level 3	UNLK/READ /LOCK	___	UNLK
L- 4	Lock Level 4	UNLK/READ /LOCK	___	UNLK

CHNG	Change password	Id-N/Id-Y	___	Id-N
NEY	New password	___	NEW = Id-Y	0

NOTE:
UNLK - Full access to the particular level / parameter.
READ - Particular level / parameter can be read but not edited.
LOCK - No access to the particular level / parameter.

Insert jumper to reset the lock - id.

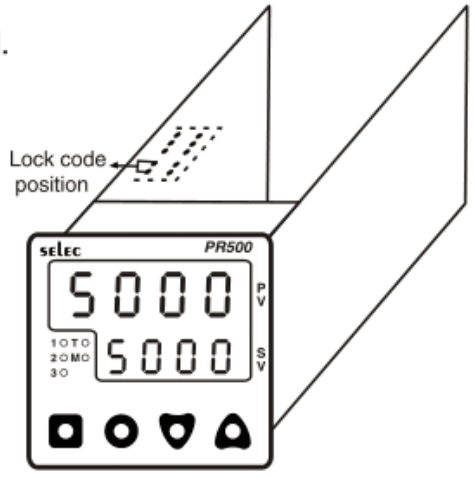

ONLINE DISPLAY OPTION

This function allows user to view online display options.
NOTE:
The parameters shown below are not prompted if they are locked in level 6.

DISPLAY	DESCRIPTION	DISPLAY CONDITION
SEt1	**Set point 1**	——
SEt2	**Set point 2**	Online access for Set 2 not valid if Auxillary output = Sensor Break / OFF / Retransmission
SEt3	**Set point 3**	Online access for Set 3 not valid if Alarm mode = Sensor Break / OFF.
tUnE	**Auto tune**	Online access for Auto tune is not valid if PB-Heat=0 and HC =no or PB-Cool=0.
HAnd	**Hand output percentage**	This parameter is not prompted if Pb- H = 0
Pb-H	**Proportional band - heat**	——
Int.t	**Integral time**	Integral time is not prompted if PB = 0
dEr.t	**Derivative time**	Derivative time is not prompted if PB = 0
mnL.r	**Manual reset**	Manual reset is prompted only if Integral-main=0 and PB-heat > 0.
Pb-C	**Proportional band - cool**	This parameter is prompted only if HC = yes.
r-SP	**Ramp set point**	This parameter is prompted only if Ramp is ON / Hold. This parameter is read only and cannot be altered.

Programming

DISPLAY	DESCRIPTION	DISPLAY CONDITION
PEnC	**Output percentage**	This parameter is read only and cannot be altered.
SOAY	**Elapsed soak time**	Note: This parameter is prompted only if Ramp is ON / Hold. This parameter is read only and cannot be altered.
°C / °F	**Temperature unit**	Note: This parameter is not prompted for 0-10 V / 4-20mA. This parameter is read only and cannot be altered.
AL-1	**Alarm acknowledge 1**	Note: This parameter is prompted only if Alarm1 is ON and Latch is ON.
AL-2	**Alarm acknowledge 2**	Note: This parameter is prompted only if Alarm2 is ON and Latch is ON.
bLnY	**Blank**	—

USER GUIDE

- **AUTO TUNING:**

Auto tuning is a function whereby the controller learns the process characteristics by itself and automatically sets the required P,I and D values. The auto-tuning function can be activated at any time during the process after power ON , while temperature is rising or when control has stabilized. Autotune is indicated by T LED blinking After the auto tuning procedures are completed, the T LED will stop flashing and the unit will revert to PID control by using its new PID values. The PID values obtained are stored in the nonvolatile memory.

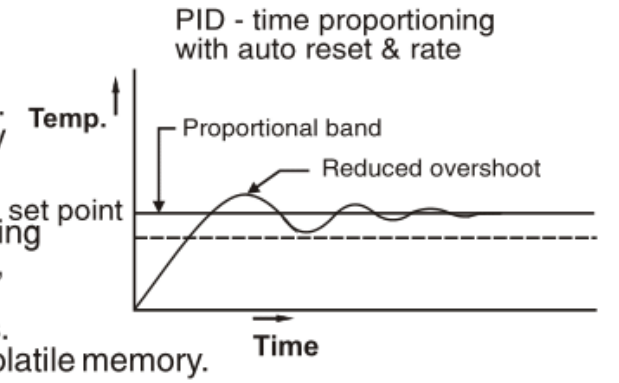

The auto-tuning is applied in cases of:

- Initial setup for a new process
- The set point is changed substanitally from the previous auto-tuning value.
- The control result in unsatisfactory.

The following controller parameters are automatically adjusted by Auto- tune according to the characteristics of the process:

Proportional Band (Pb-1)
Integral Time (It-1)
Derivative Time (dt-1)
Input Filter (FtC)

If the control performance by using auto-tuning is still unsatisfactory, the following rules can be applied for further adjustment of PID values:

ADJUST MENT SEQUENCE	SYMPTOM	SOLUTION
(1) Proportional Band (PB)	Slow Response	Decrease PB
	High overshoot or Oscillations	Increase PB
(2) Integral Time (IT)	Slow Response	Decrease IT
	Instability or Oscillations	Increase IT
(3) Derivative Time (TD)	Slow Response or Oscillations	Decrease TD
	High Overshoot	Increase TD

- **PROPORTIONAL BAND:**

Proportional band is the area around the set point where the controller is actually controlling the process; the output is at some level other than 100% or 0%.

Proportional band is expressed in terms of degree centigrade.

If the proportional band is too narrow an oscillation around the setpoint will result. If the proportional band is too wide the control will respond in a sluggish manner, could take a long time to settle at set point and may not respond adequately to upsets.

- **MANUAL RESET:**

Virtually no process requires precisely 50% output on single output controls or 0% output on two output controls. The adjustment called manual reset allows the user to redefine the output requirement at the setpoint. A proportioning control without manual or automatic reset will settle out somewhere within the proportioning band but likely not on the setpoint.

- **INTEGRAL TIME:**

Integral time is defined as the time, in seconds, which corrects for any offset (between setpoint and process variable) automatically over time by shifting the proportioning band. Integral action (also known as "automatic reset") changes the output power to bring the process to setpoint. Integral times that are too fast (small times) do not allow the process to respond to the new output value. This causes over-compensation and leads to an unstable process with excessive overshoot. Integral times that are too slow (large times) cause a slow response to steady state errors. Integral action may be disabled by setting the time to zero. If time is set to zero, the previous integral output power value is maintained. If integral action is disabled, manual reset is available by modifying the output power offset ("MNL.r" initially set to zero) to eliminate steady state errors. The controller has the feature to prevent integral action when operating outside the proportional band. This feature is called **"antireset wind-up"**.

- **DERIVATIVE TIME**

Derivative action is used to shorten the process response time and helps to stabilize the process by providing an output based on the rate of change of the process. In effect, derivative action anticipates where the process is headed and changes the output before it actually "arrives". The derivative time is calculated in seconds. Increasing the derivative time helps to stabilize the response, but too much derivative time coupled with noisy signal processes, may cause the output to fluctuate too greatly, yielding poor control. None or too little derivative action usually results in decreased stability with higher overshoots. No derivative action usually requires a wider proportional and slower integral times to maintain the same degree of stability as with derivative action. Derivative action is disabled by setting the time to zero.

- **DERIVATIVE APPROACH CONTROL:**

Derivative approach control (DAC) helps in reducing overshoot at startup. The control output cutoff point is derived as DAC x Proportional band. Note that the DAC value is automatically calculated and fed after autotuning (if tuning is initiated at startup).

- **AUTO-TUNE OF HEAT/COOL SYSTEMS:**

During Autotune of heat/cool systems, the controller switches the cooling output (O2) ON and OFF in addition to the heat output (O1). The heat/cool overlap deadband parameter (db in Level 2) determines the amount of overlap or deadband between the two outputs during Autotune.
For most applications, set this parameter to 0.0 prior to starting Autotune. After the completion of Autotune, this parameter may need to be reset. It is important that external load disturbances be minimized, and if present, other zone controllers idled as these may have an effect on the PID constant determination.
Some water cooled processes exhibit an extreme non-linear gain characteristic. That is, the process cooling gain starts very high and flattens out deeper into the cooling region. This effect may result in regular oscillations at setpoint as the controller applies heat to counteract the effect. These processes may benefit from a lower cooling fan setting and/or reduced water flow in the jacket or manifold. The process heat and cool gains should be balanced as much as possible, and the controller gains adjusted to the process.

- **ANALOG OUTPUT-RETRANSMISSION:**

1. The analog retransmission output feature allows the retransmission of the control output to an external device.
2. The output is scaled by use of Analog low and high scaling points in level 2 of the programming menu. The analog output will be proportional to PV (derived from Analog Low and High scaling.)
3. A-LO : Displays the value that corresponds to 0V, 0/4mA as selected.
   A-HI : Displays the value that corresponds to 10V or 20mA as selected.
4. Note that the main output selection in level 4 has to be relay 2.

- **ALARM MODES:**

1. Absolute alarms (Independent Alarm) :
Absolute alarm is a self-existent alarm independent of the main set point.For eg. If the main set point is 100°C and absolute alarm is set as 110°C, the alarm will be activated at 110°C.
There are two absolute alarms-
Full scale High Alarm: sets off alarm signal when temperature rises above set point to a pre-set temperature above scale minimum. **Refer Fig: d.**
Full scale Low Alarm: sets off alarm signal when temperature falls below setpoint to a pre-set temperature above scale minimum. **Refer Fig: e.**

2. Deviation alarms (Error alarm):
This alarm is activated at an error on the main set point. For eg. If the main set point is 100°C and deviation alarm is set to +5 °C then the alarm will be activated at 100+5=105 °C. Incase of deviation band alarm the alarm will be activated on both sides of set point i.e. At 95 and 105.
There are three deviation alarms -
Deviation High Alarm: sets off alarm signal when temperature rises above a pre-set temperature above the set point. **Refer Fig: a.**
Deviation Low Alarm: sets off alarm signal when temperature falls below a pre-set temperature below the set point. **Refer Fig: b.**
Deviation Band Alarm: sets off alarm signal when temperature rises above or falls below a pre-set temperature above or below the set point. **Refer Fig: c.**

3. BREAK ALARM:
Break Alarm: sets off alarm signal when sensor break / under range occurs.

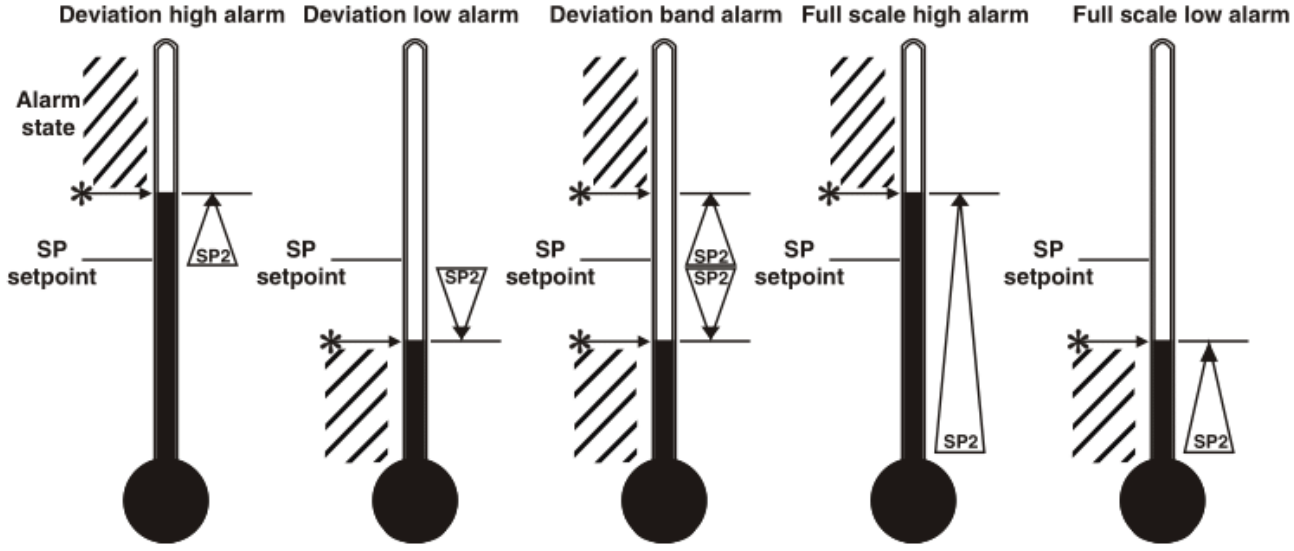

Fig: a. Fig: b. Fig: c. Fig: d. Fig: e.

- **Zone PID:**

There are 4 control Zones each having a set point and associated P, I and D values which can be programmed as per the process requirements. A control Zone is selected automatically and implemented as per the set value programmed, to accommodate changing process requirements. The corresponding P, I,D values will be used to control the process. The main advantage of Zone PID is in processes where there is a requirement of frequent tuning, due to change in setpoint. Consider a case where the process needs to be controlled at two different set points: 100°C and 400°C.

The Zone set points may be programmed as:

1. Zone setpoint 1 (Level1) : 150°C (This implies that for 0 < set1 < 150, Zone1 PID values will be considered.)
2. Zone setpoint 2 (Level1) : 450°C (This implies that for 150 < set1 < 450, Zone2 PID values will be considered.)

The P, I, D values for the respective Zones can be manually fed or can be tuned automatically.

How to tune the Zones

NOTE : Zone setpoint is not the tuning setpoint.

To tune, say, Zone 1 program the following:

1. Set1 (Online) = 100°C (for eg.) (Zone 1 : 0 - 150°C)

   Note:
   - Set1 < Zone setpoint 1.
   - The PID settings derived after tuning are stored in Zone 1.
   - After tuning, for 0 < Set1 < 150°C, PID settings of Zone 1 are applicable.

2. Program Tune = ON (in Level 1 or Online)

3. After tuning the controller is automatically loaded with the new PID values.

Now to tune the next Zone, Zone 2, program the following:

1. Set 1 (Online) = 400°C (Zone 2 :150 - 450°C)

   Note:
   - Zone Setpoint 1 < Set 1 < Zone setpoint 2.
   - The PID settings derived after tuning are stored in Zone 2.
   - After tuning, for 150 < Set1 < 450°C, PID settings of Zone 2 are applicable.

Similarly, the four different Zones can be programmed.

Configuration Record Sheet

Enter the value or selection for each prompt on this sheet so you will have a record of how your controller was configured.

Levels	Function Prompt	Value or Selection	Factory Setting
Input Parametrs	INPt	_____	J
	MESL	_____	1
	tEMP	_____	°C
	dSC.L	_____	0
	ISC.L	_____	As per input type selected.
	dSC.H	_____	9999
	ISC.H	_____	As per input type selected.
	MSCL	_____	NO
	SPHL	_____	750
	SPLL	_____	-200
Output Parametrs	SEt	_____	ALL
	tUNE	_____	OFF
	tUNE	_____	P.AU
	MAIN	_____	ME
	P-LO	_____	0
	P-HI	_____	100
	Pb-1	_____	10
	HYSt	_____	1.0
	HYS.b	_____	0.0
	tMR	_____	0.0
	It-1	_____	120
	dt-1	_____	30

Configuration Record Sheet

Levels	Function Prompt	Value or Selection	Factory Setting
Output Parametrs	dAC	_____	1.0
	CYC.t	_____	USEr
	CYC.U	_____	15.0
	Any	_____	AUtO
	Any.P	_____	100.0
	AnL.r	_____	0
Zone Settings	2-nO	_____	1
	2SP1	_____	0
	Pb-1	_____	10
	It-1	_____	120
	dt-1	_____	30
	2SP2	_____	0
	Pb-2	_____	10
	It-2	_____	120
	dt-2	_____	30
	2SP3	_____	0
	Pb-3	_____	10
	It-3	_____	120
	dt-3	_____	30
	2SP4	_____	0
	Pb-4	_____	10
	It-4	_____	120
	dt-4	_____	30

Configuration Record Sheet

Levels	Function Prompt	Value or Selection	Factory Setting
Auxiliary Output Modes	MODE	_____	ALMM
	SET2	_____	dEU
	SET2	_____	0
	Pb-C	_____	0.0
	CYC.t	_____	15.0
	HYSt	_____	1.0
	HYS.b	_____	0.0
	AL-1	_____	dUHI
	LtCH	_____	OFF
	HOLd	_____	OFF
	ALMM	_____	EN
	AMM	_____	OFF
	A-LO	_____	0
	A-HI	_____	1000
	S.EMP	_____	HIGH
Alarm 2 Module	AL-2	_____	dUHI
	LtCH	_____	OFF
	HOLd	_____	OFF
	ALMM	_____	EN
	AMM	_____	OFF
	SET3	_____	0
	HYSt	_____	1.0
	HYS.b	_____	0.0

Configuration Record Sheet

Levels	Function Prompt	Value or Selection	Factory Setting
Special Function	XC	_____	NO
	ZONE	_____	NO
	ñA IN	_____	PLY I/AOUt
	SSP	_____	OFF
	SOFt	_____	OFF
	HANd	_____	OFF
	PAñP	_____	OFF
	PAtE	_____	100
	SOAY	_____	0
	OPEN	_____	AUtO
	FA IL	_____	0
	b IAS	_____	0.0
	FtC	_____	I
	PNdG	_____	I.0
	StNd	_____	NO
	PSEt	_____	NO
Communication	bAUd	_____	9600
	AddP	_____	I
	PAP I	_____	NONE
	StOP	_____	I

Calibration Certificate

Date:

Model No: **Sr. No.:**

Claimed Accuracy: ± 0.25% of full scale ±1 digit (After 20min warmup time)

Sources calibrated against: Kusam-meco, model 405, Sr. No.: 104446

Multimeter calibration report no: CC/FCL/1131/09-10
IDEMI **Date**: 08/06/2010

The calibration of this unit has been verified at the following values:

SENSOR	CALIBRATION TEMP (°C) (0.1 resolution)	DISPLAY VALUE (°C)	SENSOR	CALIBRATION VALUE (0.1 resolution)	DISPLAY VALUE
K	35.0	35.0	Voltage (VDC)	0.0	0.0
	700.0	700.0		10.0	10.0
	1350	1350			
PT100	0.0	0.0	Current (mA)	0.0	0.0
	500.0	500.0		20.0	20.0
	800.0	800.0			

The thermocouple / RTD curves are linearised in this microprocessor based product, and hence the values interpolated between the readings shown above are also equally accurate, at every point in the curve.

Unit is accepted as accuracy is withing the specified limit of claimed accuracy and certificate is valid upto one year from the date of issue.

CHECKED BY: